Bergo traffic signs

SIB
12

Leaflet No BD 5
April 1981

Bergo specification

Material
Signplates are made from 3mm aluminium sheet.

Background
Non-reflective signs are covered over the whole front face with

Scotchcal or other approved plastic sheeting applied by vacuum applicator. Reflective signs are faced with Scotchlite or other approved material, except for primary route or motorway signs where the green or blue background is non-reflective.

Legend
The legend, symbols and borders of most commonly used standard

signs, are screen printed whether reflective or non-reflective. On direction signs, the legend is cut

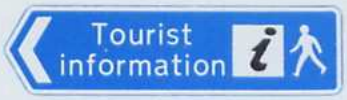

from Scotchcal sheeting for all non-reflective signs, and for signs with

a reflective background. Primary route or Motorway signs which are reflective have Scotchlite legend.

High intensity Scotchlite, giving increased efficiency can be supplied instead of ordinary Scotchlite, if required.

The backs of all signs are stove enamelled grey to BS 381C No 693, unless otherwise specified, and the edges of all signs are sealed with lacquer.

Stiffening
Except where otherwise specified, small signs less than 600mm 24″ wide do not require stiffening or framing, and these will normally be supplied drilled for fixing by Uni-clips or 'C' brackets.

Signs which require stiffeners are supplied complete with extruded aluminium channel riveted on with aluminium alloy rivets. The mandrels of the rivets are stainless steel, and the rivet heads are covered by plastic caps to match the face of the sign.

Larger direction signs, over 6m² 64 ft² in area are supplied using Bergoplanks, which are described in a separate leaflet.

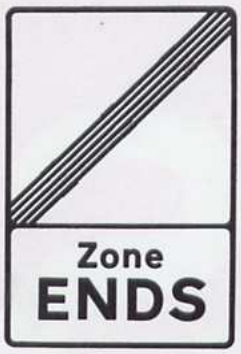

The Expanded Metal Company (Mfg) Limited

Bergo Division

PO Box 14
Longhill Industrial Estate (North)
Hartlepool TS25 1PR

Telephone 0429-66633
Telex 58597

A subsidiary of
The Expanded Metal Company Limited

Bergo

CI/SfB (90.7)
Leaflet BD19
July 1984

Bergoplank Sign System

Bergo Bergoplank

Identification

Introduction

The original Bergoplank principle was developed 14 years ago from a system widely used in America and on the mainland of Europe and is believed to be the first extruded aluminium design used for traffic signs in the U.K. The system consists of using extruded aluminium planks to make up the required sign.

Description

Composition

Extruded aluminium planks 295mm or 220mm high are used to make up the sign, thus enabling increments in height of 75mm to be achieved. The planks, which are cut to the required length of the sign, incorporate ribs 28.5mm thick and require no further stiffening or framing. Each plank is clamped to the supports and clamped to its neighbour to form a very rigid sign, free from bolt and rivet heads, which collect dirt and streak the sign face.

Bergoplank material:
Extruded aluminium grade HE9TF alloy 604.
All edges deburred, faces free from scratches.
Hot trichlorethylene degreased, deoxydized and alochromed.
Backs painted one coat acrylic stove grey.
Faces: (wrapped around top and lower edges).
3M Scotchlite reflective sheeting class 1 or 2.
3M Scotchcal non-reflective sheeting.

Size

Maximum continuous plank length is 6.4m.
Sign length is infinite using planks with end joiners. Planks interlock vertically to obtain any sign height.

Performance

Durability

Rust immunity: There is no ferrous metal involved in the sign. Stainless steel nuts and bolts are used for fixing the planks to the supports. The system has proved itself very suitable for motorway signs, general signs and even oil and gas platforms in the North Sea.

Construction

Transport, Handling

A sign 4575mm × 3540mm would be transported in a stack 4575mm long, 305mm wide and 610mm high, weighing less than 200kg. An entire lorry can easily be unloaded by one man.

Each plank is wrapped for full protection from scratches and damage. They are light in weight and the longest can be managed by one man.

Installation

It takes a matter of minutes for even the largest sign to be erected, using a three-man team and no lifting apparatus. Since each plank presents a comparatively small area, even quite strong winds are no handicap.

Adaptability to site conditions: Due to the method of fixing the posts can be positioned to suit site conditions. For fixing the bolt heads simply slide along in the channel section as shown in fig. 4.

Special stainless steel pressings are available for attachment to concrete, r.s.j. or universal beam supports.

Bergoplanks can be mounted on tubular posts by means of stainless steel clips (fig. 5) or Expamet stainless steel band and buckles.

Public safety

In the event of the sign being hit by a vehicle, the damage to the vehicle and sign could be less severe than if a conventional steel-framed sign were hit.

Maintenance

Repair, Replacement

Should a sign be damaged, only the damaged planks need be removed. Repair is then a simple matter from both material and labour aspects. Similarly, removal of Bergoplanks for renovation of reflective surfaces is comparatively cheap and simple.

Fig. 2 Bergoplank extrusions

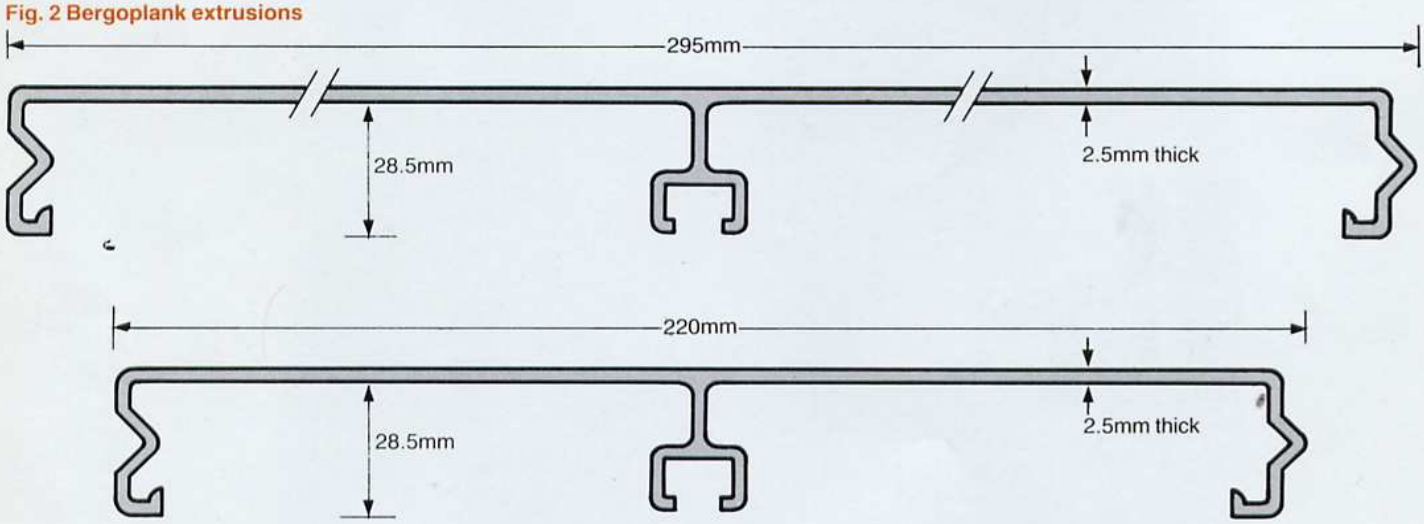

Fig 1. It takes a matter of minutes for even the largest sign to be erected.

Sign System

Fig. 3 Rear view of Bergoplank sign on two r.s.j. or universal beam posts.

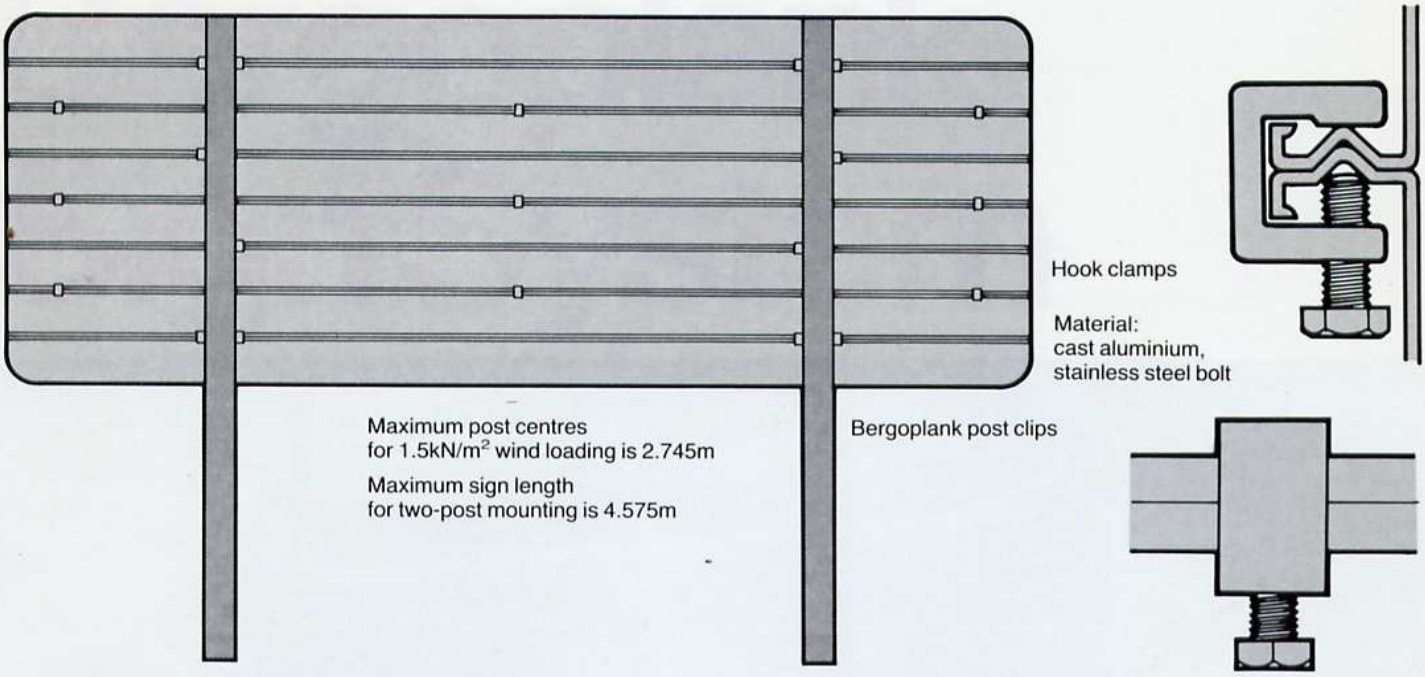

Fig. 4 Bergoplank to flange fixing

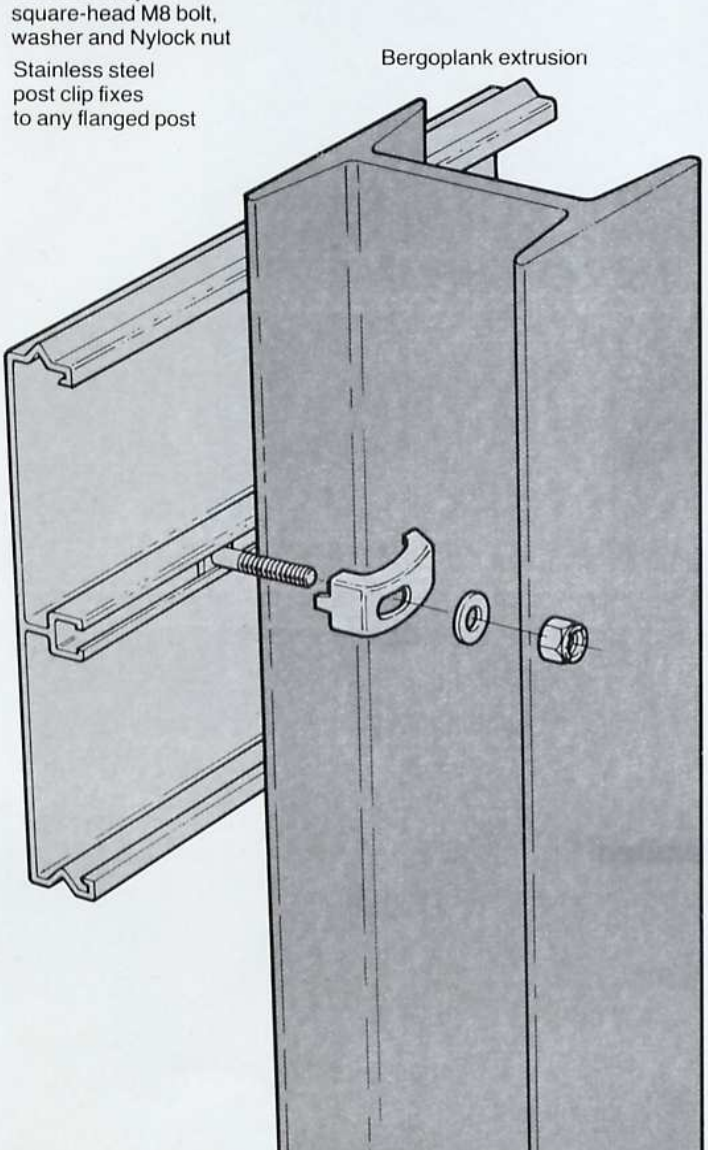

Fig. 5 Bergoplank to tubular post fixing

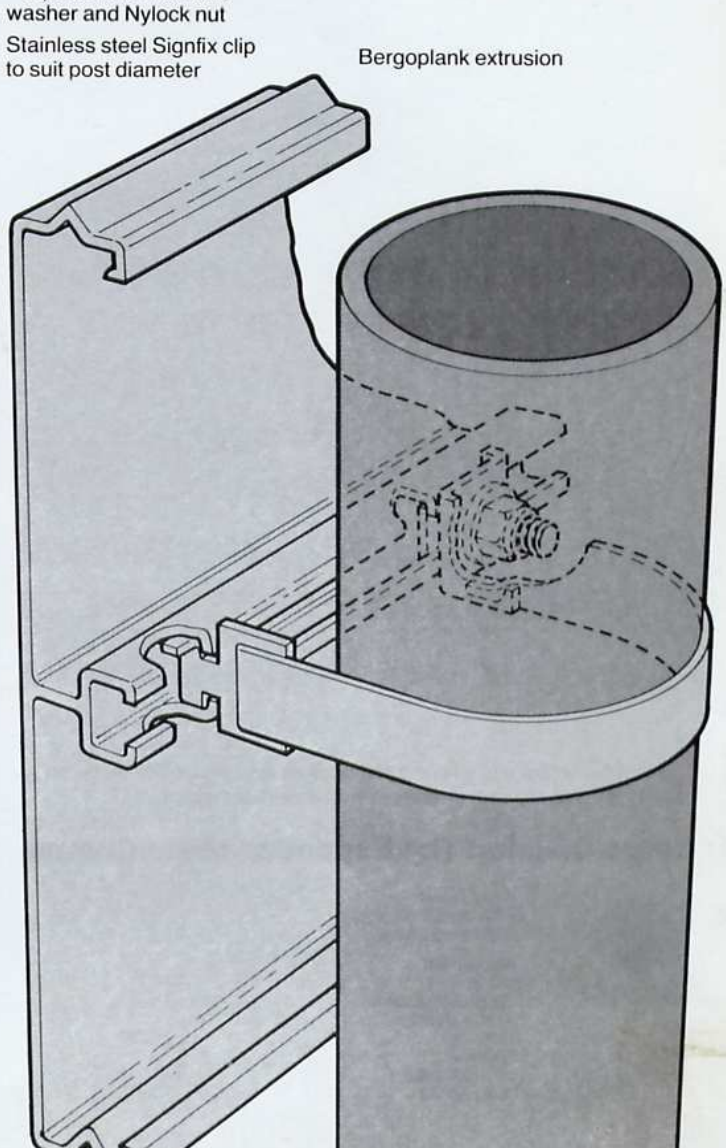

Leaflet No. BD 8
June 1981

CI/SfB

Bergo box signs

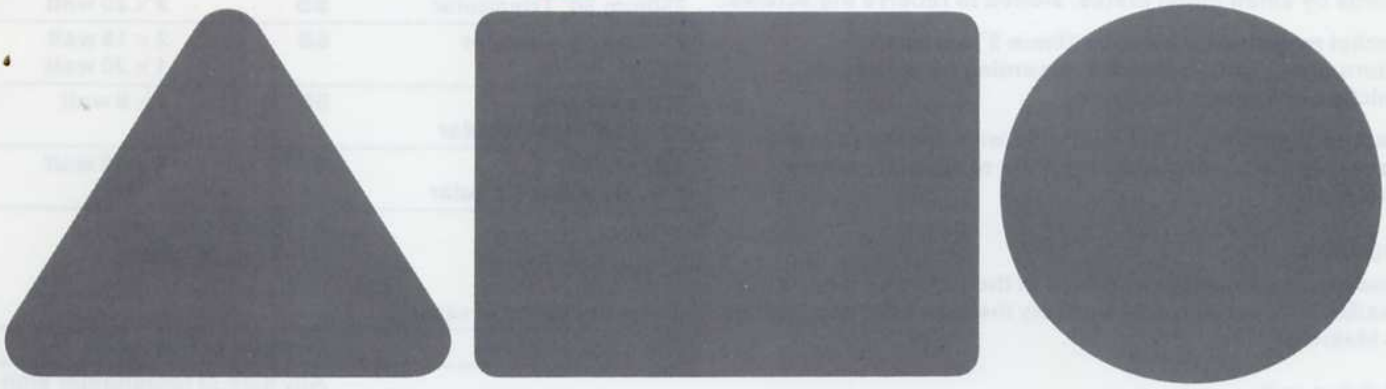

A well designed range of internally illuminated warning, regulatory and informatory signs to the Traffic Signs Regulations 1975, combining ease of maintenance with an excellent standard of lighting. Illustrations are shown below of a 600mm 24″ diameter 'no right turn' sign.

Specification

Box

Made from reinforced glass fibre with a high gloss finish outside grey to BS 381C No 693, and white inside.

The frame is attached to the box by means of a nylon hinge and secured by stainless steel key-headed captive screws. Additional strength is provided at these fixing points by small metal plates, slotted to receive the screws.

Socket mounted for fixing to 76mm 3″ o/d posts, or alternatively drilled for back-mounting by means of uniclips or Expamet brackets.

Back mounted signs are available with apertures in the base of the box, for the illumination of supplementary plates.

Sign face

Made from glass fibre and held in the frame by means of a flexible PVC gasket. Alternatively the face may be supplied in Makrolon.

Lighting unit

Mounted on a removable sheet metal tray which is fixed to the back of the box.

Each unit comprises lamps, starters, and ballasts wired in two independent circuits, and designed to give the necessary standard of luminance laid down in the Traffic Signs Manual, Chapter 11, Appendix V.

Sizes Available ex stock

Dimensions	Method of Mounting	Details of lamps in lighting unit
600mm 24″ Circular	SB	2 × 15 watt
600mm 24″ Triangular	SB	2 × 15 watt
750mm 30″ Triangular	SB	2 × 20 watt
750mm 30″ Circular	SB	2 × 15 watt 1 × 20 watt
300 × 450mm 12″ × 18″ Rectangular	SB	2 × 8 watt
600mm 24″ Double sided Circular	S	2 × 15 watt

S – Socket Mounted
B – Back Mounted

Sizes available to order:	
900/1200/1500mm	Circular or triangular
	Any size of rectangular sign

The Expanded Metal Company (Mfg) Limited

Bergo Division

PO Box 14
Longhill Industrial Estate (North)
Hartlepool TS25 1PR

Telephone 0429-66633
Telex 58597

A subsidiary of
The Expanded Metal Company Limited

Street Nameplates made from 11 g. pure aluminium sheet, with deeply pressed letters, in either standard M.O.T. lettering or "KINDERSLEY," having a really superlative stove enamelled finish, which is GUARANTEED FOR A MINIMUM PERIOD OF THREE YEARS. Plates are supplied drilled as shown unless otherwise specified.

RADDENSTILE LANE

4" M.O.T. LETTERS ON A 9" BACKPLATE

OLD WARKE DRIVE

4" M.O.T. LETTERS ON A 6" BACKPLATE

3.

BOROUGH OF UXBRIDGE
ANGLE CLOSE

SINGLE ROW OF 4" M.O.T. WITH 1½" M.O.T. HEADING (IN BLACK OR RED) ON AN 11" BACKPLATE. 2 ROWS of 4" FIT ON A 15" BACKPLATE

4.

HARTLET STREET

2 ROWS OF 3" M.O.T. LETTERS ON A 12" BACKPLATE OR ON A 15" BACKPLATE IF A PLACE NAME HEADING IS REQUIRED

5.

← THE QUARRIES

3½" "KINDERSLEY" ON A 9" BACKPLATE

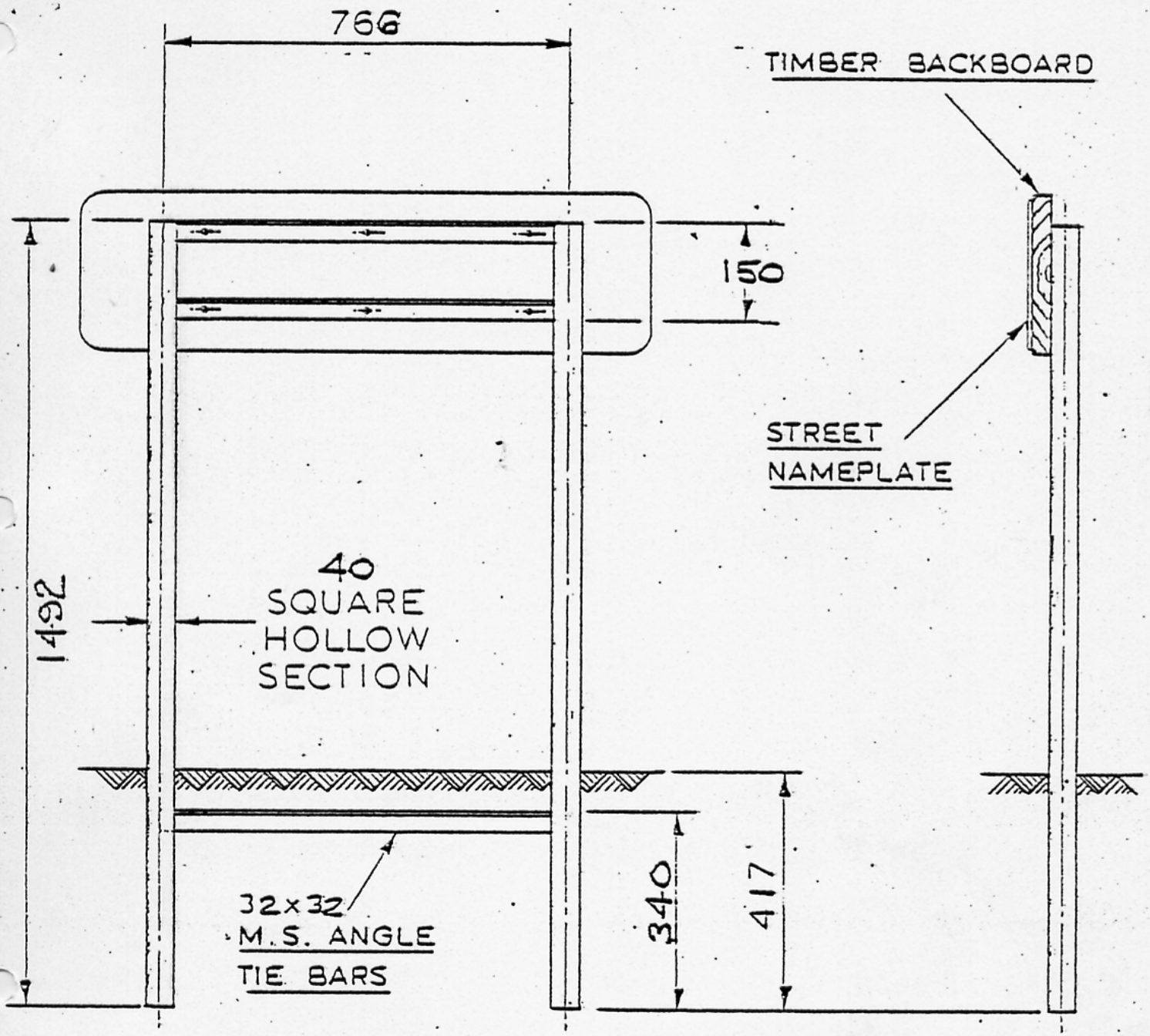

FINISH : GALVANISED

ALL DIMENSIONS IN MILLIMETRES

DRAWN BY DM DATE 24.7.68

BERGO LIMITED.

STREET NAMEPLATE SUPPORT

Leaflet No. BD 6
August 1979

CI/SfB
12

Bergo posts for traffic signs

Bergo posts for traffic signs

Bergo Posts For Traffic Signs
Traffic sign posts are made from mild steel welded tube, cut to length and finished by one of the following processes.

A) Zinc sprayed and painted grey
The posts are shot blasted and rustproofed by the zinc spray process, followed by two coats of paint, one undercoat and one top coat.

B) Plastic coated
The posts are shot blasted and sprayed with adhesive, then coated by the fluidized bed process with PVC Vyflex PC80.

The finished colour is grey to BS 381 C No. 693, except for posts for pedestrian crossing beacons which are painted with black and white bands.

Plastic caps and steel baseplates are supplied with all tubular steel posts and large base posts.

Posts are supplied to suit individual signs, in lengths in increments of 100mm. The post length is determined by adding together the following dimensions.

1) For illuminated signs only, 100mm to support the socket for the lighting unit, or the internally lit sign.

2) The height of the sign.

3) The mounting height, i.e. the distance from the bottom of the sign to ground level.

4) The depth below ground, commonly referred to as the 'root'.

The diameter of the post is determined by reference to the nomograms in Chapter 13 of the Traffic Signs Manual. The factors governing the nomograms are as follows:

1) The area of the sign.

2) The assumed wind-pressure.

3) The mounting height.

Tubular Steel Posts
These are available in the following sizes:

	Metric equivalent mm	Imperial inches
Outside diameter	60	$2\frac{3}{8}$
	76	3
	89	$3\frac{1}{2}$
	102	4
	114	$4\frac{1}{2}$
	140	$5\frac{1}{2}$
	168	$6\frac{5}{8}$
	194	$7\frac{5}{8}$
	219	$8\frac{5}{8}$
	244	$9\frac{5}{8}$

Large Base Posts
These are used for illuminated signs, and are available as follows:

Top portion	Base portion	Recommended root depth
76mm	140 or 168mm	500 or 600mm
89mm		700mm
102mm		800mm
114mm		900mm
140mm	168mm	900mm

Large base posts are provided with the following:

1) Aperture in the base portion measuring 380 × 110mm.

2) Access door locked by a heavy brass screw operated by key with triangular recess.

3) Hardwood switchboard 380 × 90mm.

4) Earthing screw.

5) Cable slot 175 × 75mm, the top of the slot being 150mm below ground level.

Posts for large signs
Rolled steel joist supports are recommended for signs which require posts in excess of 140mm diameter, as the clips fixing the sign are secured to the flange of the RSJ, and there is no necessity for a strap or bracket to surround the post, as in the case of a circular or rectangular hollow section support. This recommendation applies particularly to plank signs.

RSJ supports are supplied in the following sizes, finished either zinc sprayed and painted, PVC plastic coated, or hot dip galvanised.

	Metric mm	Imperial inches
Rolled Steel Joist	127 × 76	5 × 3
	152 × 89	$6 \times 3\frac{1}{2}$
	178 × 102	7 × 4
	203 × 102	8 × 4
Universal Beams	203 × 133	$8 \times 5\frac{1}{4}$
	254 × 146	$10 \times 5\frac{3}{4}$
	305 × 165	$12 \times 6\frac{1}{2}$
	356 × 171	$14 \times 6\frac{3}{4}$
	406 × 152	16 × 6
	457 × 152	18 × 6

Large signs may, where specified, be mounted on the following alternative types of support.

1) Tubular steel posts as listed above.

2) Rectangular hollow sections.

3) Pre-stressed concrete posts, up to 9.45m in length.

4) Reinforced concrete posts.

The Expanded Metal Company (Mfg) Limited

Bergo Division

PO Box 14
Longhill Industrial Estate (North)
Hartlepool TS25 1PR

Telephone 0429-66633
Telex 58597

A subsidiary of
The Expanded Metal Company Limited