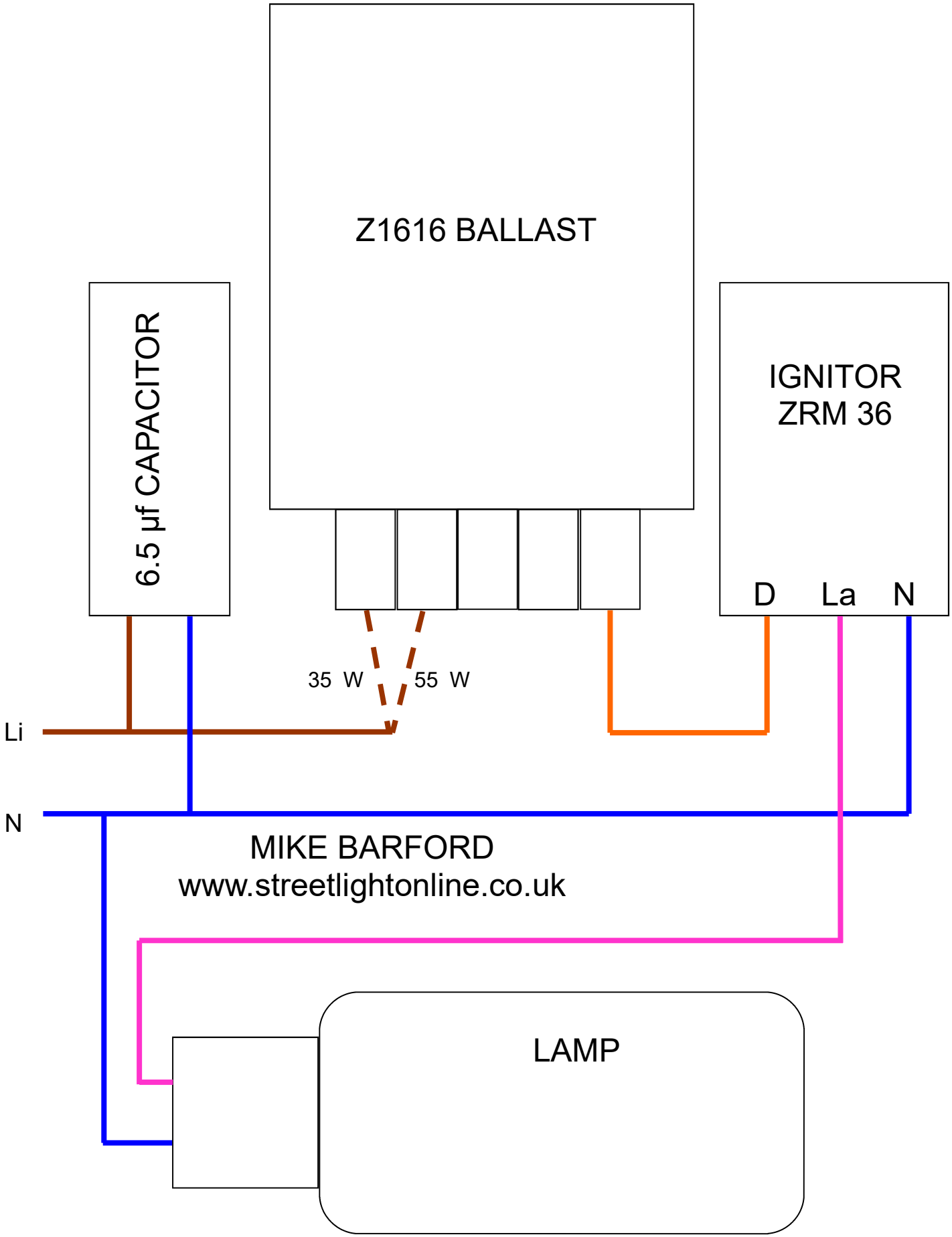
Z1616 BALLAST
6.5 µf CAPACITOR
IGNITOR
ZRM 36
D
La
N
35 W
55 W
Li
N
MIKE BARFORD
www.streetlightonline.co.uk
LAMP